WHITE PAPER

Eliminating Workplace Hazards from Metalworking Fluid Mists

Processes like cutting and grinding constantly release metalworking fluid mist into the air that can be inhaled by machine operators. These tiny oily particles eventually settle on floors and surfaces, causing a housekeeping mess and a slipping hazard. It's important to understand the regulations that limit exposure to metalworking fluids. Shops must also be familiar with the various technologies available to comply with OSHA regulations and other indoor air quality standards. This white paper will help you gain this understanding to prevent mist-related safety and health issues in your facility.

camfil
AIR POLLUTION CONTROL

By John Dauber and Kevin Tucker

The metalworking fluids (MWFs) commonly used during machining processes generate airborne particles that must be carefully controlled. Otherwise, they create a housekeeping mess and threaten worker health. It's important to understand the hazards associated with coolant and lubricant mists as well as exposure limits set by OSHA and other entities.

This white paper will review these issues and describe how to keep machining centers clean using the latest mist collection technology. It will also review best practices in mist collector maintenance and general housekeeping.

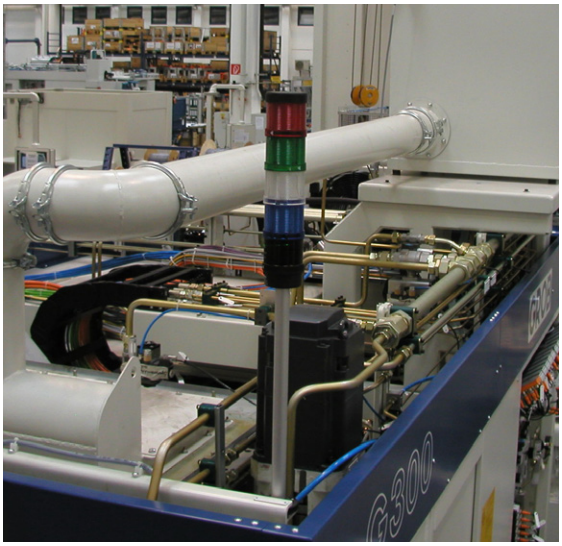

This machining center is equipped with high-efficiency equipment designed to collect airborne particles of water-based coolant.

Inside:

Page 3 What is MWF mist?

Page 3 Regulations and guidelines for coolant and lubricant mists

Page 5 Health risks of coolant mists

Page 6 Water-soluble coolants versus straight oils

Page 6 Mist collection technology options

Page 9 Mist properties that affect collector design

Page 9 Measuring mist collection performance

Page 10 Design challenges and considerations

Page 11 General work practices and controls for reducing exposure

What is MWF Mist?

There are many different types of particles in the air that are not visible to the human eye. Airborne particles can be solid or liquid or gas form, made of any mineral, and they can be many different sizes. Mist is defined as a liquid droplet that is 20 microns or smaller.

MIST

Airborne droplets of liquid that are ***20 microns*** *or smaller.*

In metalworking shops, mist is most commonly produced through machining processes that use fluids to cool and lubricate parts as they are machined. Machining processes produce mist through impaction, centrifugal force, or evaporation/condensation. Metalworking fluids (MWFs) made of oil produce smaller particles than water-soluble fluids. There's a common misconception that if you can't see a mist, it is not a problem. But actually the opposite is true. The smaller the mist particle, the more deeply embedded it can become in the human body, causing severe health risks.

Regulations and Guidelines for Coolant and Lubricant Mists

Metal machining processes generate three general categories of mist:

- **Coolant aerosols** – These are formed when condensation cools or by mechanical processes like cold heading and heat treating.
- **Coolant vapors** – These are formed when hydrocarbon liquids are heated and turn into gases.
- **Coolant fumes** – These are the smallest solid particles in the air and are formed during combustion processes.

OSHA PELS

- 5 mg/m^3 for an eight-hour time-weighted average (TWA) for mineral oil mist
- 15 mg/m^3 for an eight-hour TWA for Particulates Not Otherwise Classified

The Occupational Safety & Health Administration (OSHA) uses two air contaminant permissible exposure limits (PELs) that apply to MWFs. MWF hazards are addressed in specific OSHA standards for general industry, shipyard employment, and the construction industry. The applicable standard for General Industry is *29 CFR 1910, Subpart Z; Toxic and hazardous substances; 1910.1000, Air contaminants; Table Z-1, Limits for air contaminants.*

OSHA has also published a *Metalworking Fluids: Safety and Health Best Practices Manual.* This manual incorporates recommendations from the OSHA Metalworking Fluids Standards Advisory Committee Final Report (1999); the NIOSH Criteria Document on Occupational Exposure to Metalworking Fluids (1998); and the Organization Resources Counselors' *Management of the Metal Removal Fluid Environment: A Guide to the Safe and Efficient Use of Metal Removal Fluids* (1999). It does not carry the force of law or regulation, but is meant to be advisory and informational, and it contains a wealth of useful information. The goal is to help employers develop prevention programs that will create safer workplaces for employees exposed to MWFs.

Other groups besides OSHA have weighed in on exposure limits applicable to MWFs. The National Institute for Occupational Safety and Health (NIOSH) has set a much stricter recommended exposure limit (REL) for MWF aerosols of 0.4 mg/m^3 for a 10-hour TWA for a 40-hour work week concentration for thoracic particulate mass. Thoracic particulate mass is defined as the fraction of inhaled particles capable of passing beyond the larynx during inhalation.

This REL is intended to prevent or greatly reduce respiratory disorders causally associated with MWF exposure. It is NIOSH's belief that in most metal removal operations, it is technologically feasible to limit MWF aerosol exposures to 0.4 mg/m^3 or less (NIOSH 1998b).

The American Conference of Governmental Hygienists (ACGIH) has also set two threshold limit values (TLVs) for mineral oils, which are summarized in **Table 1**:

- 5 mg/m^3 for an eight-hour TWA.
- 10 mg/m^3 for a 15-minute short-term exposure limit (STEL).

Table 1: Exposure Limits for MWF Contaminants

Regulatory Organization	Exposure Limit	Applicable to:
OSHA	5 mg/m^3 for an 8-hour time-weighted average (TWA)	Mineral oil mist
	15 mg/m^3 for an 8-hour TWA	Particulates Not Otherwise Classified
NIOSH	0.4 mg/m^3 for a 10-hour TWA for a 40-hour work week concentration for thoracic particulate mass	MWF aerosols and thoracic particulate
ACGIH	5 mg/m^3 for an 8-hour TWA	Mineral oil mist
	10 mg/m^3 for a 15-minute short-term exposure limit (STEL)	

Also, in 2003, the American Society for Testing and Materials (ASTM) published the *ASTM International Metalworking Industry Standards: Environmental Quality and Safety, Fluid Performance and Condition Monitoring*. This document provides standard test methods, practices and guides for proper selection and use of MWFs to ensure optimal performance and reduced worker health risk.

ASTM also has a wide range of standards relating to MWFs. Some of the most pertinent ones include:

- **ASTM Standard E 1687-98**, Determining Carcinogenic Potential of Virgin Base Oils in Metalworking Fluids.
- **ASTM Standard E 1302-00**, Standard Guide for Acute Animal Toxicity Testing of Water-Miscible Metalworking Fluids.
- **ASTM Standard E 1497-00**, Standard Practice for Safe Use of Water-Miscible Metalworking Fluids.
- **ASTM Standard E 2889–12**, Standard Practice for Control of Respiratory Hazards in the Metal Removal Fluid Environment.

Health Risks of Coolant Mists

A number of adverse health effects are associated with MWFs including problems with the skin, lungs, digestive tract and lungs. The personal exposure limits (PELs) defined in the previous section have been developed to protect workers against many of these adverse health effects. If your facility is meeting the PEL requirements but workers are still experiencing symptoms, it may be necessary to set lower goals.

Water-Soluble Coolants versus Straight Oils

There are two general categories of MWFs used in machining processes:

WATER-SOLUBLE COOLANTS

These cooling lubricant concentrates are diluted with water up to their usage concentration. They are generally made of an oil/lubricant/water-mixture and additives such as emulsifiers, esters and sulfur compounds, rapeseed oil, polymeric alcohols, defoamers, biocides and anti-corrosion additives. The oil or lubrication proportion is typically about 5 to 11 percent.

Water-soluble coolants are primarily used to dissipate heat during machining processes like milling, drilling, tapping, turning and grinding. Their lubricating effect is lower than that of undiluted oil.

A gear hobbing machine uses a steady stream of coolant, which generates mist.

STRAIGHT OILS

As the name implies, these coolants are not mixed with water. They are used according to the composition provided by the manufacturer, and are usually composed of liquid hydrocarbon compounds (e.g., mineral oils, natural/synthetic oils) and additives (e.g., phosphorus, sulfur, chlorine compounds). Oils that contain chlorine are very hazardous. Other additives provide rust protection, foam or mist reduction, and reduced viscosity.

Straight oils have excellent lubricating properties in applications like turning, drilling, milling, grinding, broaching, honing, rolling, deep-drawing and pressing.

Mist Collection Technology Options

A variety of equipment is available to capture mists from both water-soluable and straight oil coolants and lubricants.

FIBERGLASS V-BAG

The most common mist collectors are the fiberglass V-bag style offered by a wide range of manufacturers. These collectors use a first-stage Chevron metal filter, a second-stage aluminum mesh filter, and a third-stage fiberglass V-bag with a 95 percent ASHRAE (American Society of Heating, Refrigeration and Air Conditioning Engineers) efficiency rating.

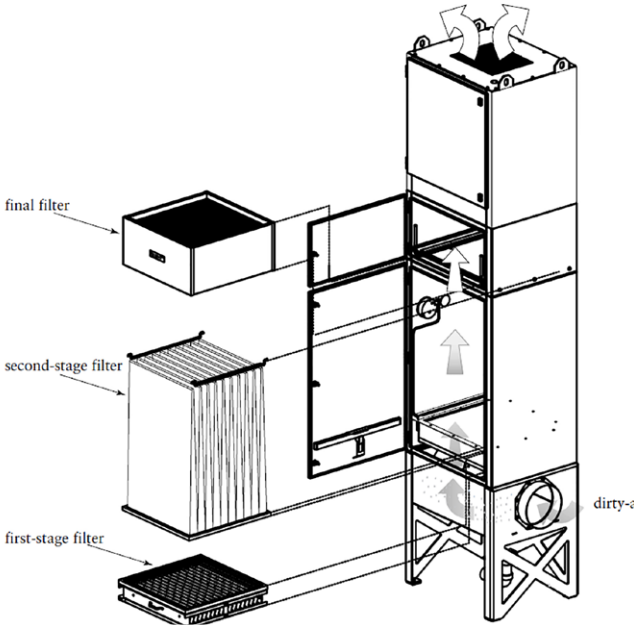

Figure 1– Fiberglass V-bag style mist collector

The ASHRAE efficiency rating is a bit misleading in that it has nothing to do with oil removal; it is used to measure efficiency in removing dry particulates. Most units also offer an optional fourth-stage HEPA final filter for added protection and cleanliness.

Fiberglass V-bag style collectors like the one in **Figure 1** have pros and cons. The first "pro" is a relatively low purchase price. They can usually be used for both straight oil and water-based coolants, but the units lose efficiency as the primary filter bags become saturated with fluid. This means that filters must be changed regularly to prevent harmful emissions from escaping into the workplace, a major "con." For this reason, V-bag collectors work well on lighter-duty applications but not as well for heavy-duty use and long production runs.

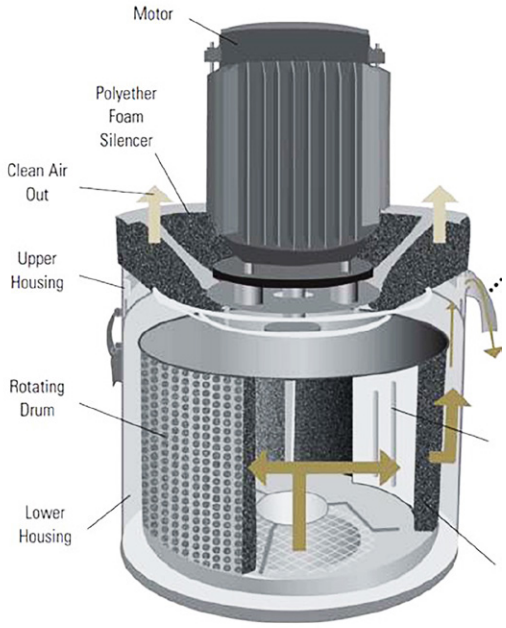

Figure 2 – Centrifugal-type mist collector

INERTIAL SEPARATION

Centrifugal-type mist collectors **(Figure 2)** use a rotating drum to spin out the oil. This process is called inertial separation. Typically, there is a pad inside the unit that functions as a final filter, but most contaminants are removed by the rotating action of the drum. If the unit collects too many chips, it can go out of balance and malfunction, creating a health hazard as well as a maintenance headache.

Like V-bag collectors, centrifugal collectors may also be used for straight oil and water-based coolants and have a relatively low purchase price. And they are also best suited for lighter-duty use such as machining centers that operate a few hours a day or change out parts only occasionally. If the doors are opened frequently to change out parts and the equipment is not properly vented, mist escapes back into the air.

Figure 3 – High-efficiency mist collector for both water-based and straight oil coolants.

ELECTROSTATIC PRECIPITATION

This type of mist collector removes mist particles using an induced electrostatic charge. The collector draws the mist-laden air through an ionizer that applies the charge to the drops of mist. Collection cells use alternating high voltage and grounded plates to pull the mist drops onto a plate where they collect and drain out. These collectors use very little energy, and they don't use filters at all. However, they do require a lot of painstaking maintenance to be clean enough to maintain their efficiency. Secondly, they produce ozone, which is a known hazard. Lastly, they can produce electric arcs when plates are damaged or metal chips are collected along with the drops of mist. For these safety, environmental and operations issues, this technology is seldom used anymore.

HIGH-EFFICIENCY FILTRATION TECHNOLOGY

V-bag and centrifugal collectors are very limited in terms of run time, filter service life and filtration efficiencies. Many machining center operators recognize that one collector size and type does not fit all applications. Because straight oils and water-based coolants have very different properties

and characteristics, it often makes more sense to purchase a highly engineered collection system that is specifically designed for use with one type or the other. These systems mechanically separate mist from the air with impingement.

Figure 3 shows a high-efficiency mist collector designed for water-based coolants. It uses two stages of long-life coarse and fine filter demisters followed by a final-stage HEPA filter with combined efficiencies of 99.9 percent on particles of 0.3 micron and larger. This is a much higher capture efficiency than that of a fiberglass V-bag filter. The optional HEPA filter stage is typically used for processes that generate smoke or very fine particulates.

This unit also has a patented integrated spraying system that performs two functions:

1. Counteracts emulsion "clumping" in the system by maintaining the correct balance of water to oil.
2. Cleans the demister filters.

In a typical mist collection system, the coolant tends to thicken to a honey-like consistency. This can gum up filters and other internal components, requiring downtime for maintenance. The high-efficiency mist collector eliminates this problem with an integrated spraying system that self-cleans. This system greatly reduces maintenance and provides an unprecedented primary filter life of up to 6 years.

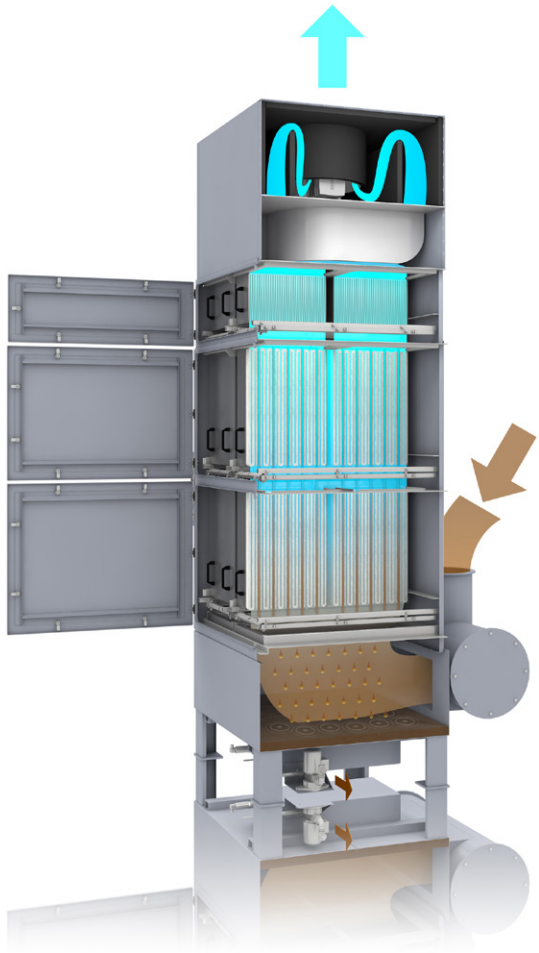

Figure 4 – High-efficiency mist collector for straight oils

Figure 4 shows a mist collector designed for straight oils. Note that the filtration stages are quite different from those in Figure 3. A first-stage coarse mesh filter first separates out large particles and chips. The next two stages of diffusion filters (a pre-filter and a fine filter) collect the majority of the mist. Media separators in the filter packs provide optimum airflow and maximum usable media area within a compact space.

This design combines high-efficiency separation and self-cleaning/drainage of the separated oil. The benefits of high-efficiency straight oil mist collection are:

- Reduced energy consumption
- Separation efficiencies up to 99.97 percent on 0.3 micron and larger particles
- Extended filter life of three years on average
- Enhanced protection with an optional HEPA final filter for removing ultra-fine mists and/or clean air recirculation
- Operates 24/7
- Withstands the most challenging applications

Mist Properties that Affect Collector Design

It's important to consider mist properties like temperature, concentration and droplet size to specifiy the right mist collector for your application. Larger droplets are easiest to capture, but they weigh more and create a heavier mass of liquid inside the collector to drain. Different types of mists have different surface tension and viscosity properties, which also affects draining. Also, high temperature mists can evaporate or condense as they cool, creating smaller droplets.

Mist concentration, the amount of mist contained in a certain air volume, varies widely from application to application. Mist concentration can range from 3 to 37 mg/m^3, and many of these concentrations fall within OSHA's exposure limits. Your equipment supplier can help you analyze these qualities and recommend appropriate solutions.

Items to factor in:

- Oil or coolant
- Application (e.g., rough/finish machining typically has higher temps, more heat, etc.)
- High- versus low-pressure coolant
- High versus low speed (RPM) of machine tool
- Enclosed machine tool versus open machine tool
- Hours of operation (24/7 versus 8 to 5)
- Additives, like detergent in wash applications, de-foamer in central coolant filter application, rust preventative in final wash applications
- Inlet air temperature

Measuring Mist Collection Performance

The main properties that indicate how well a mist collector is performing are airflow, efficiency and pressure drop.

Airflow indicates the amount of air being cleaned, but there is a tradeoff between effectiveness and energy usage. High airflow means lots of air is cleaned, but high airflow can waste a lot of energy to pull the extra air through the collector. Low airflow uses less energy, but might not pull enough air into the system to capture all the mist that is being produced. Since it is desirable to have a constant airflow, lean on your equipment supplier's expertise to recommend the optimal airflow level.

Efficiency measures air quality. The goal of a mist collector is to constantly remove mist from the air and return clean air to the work environment, so it is important to be able to quantify how clean the air is after leaving the mist collector.

Pressure drop measures the pressure at the filter, and it's desirable to maintain a low, stable pressure drop. High pressure drop indicates that the mist collector is using a lot of energy to pull air through the filters. This is often because filters are clogged or require maintenance or change-out. The collector could also have a high pressure drop because the filter is too high efficiency for the application.

Design Challenges and Considerations

When designing mist collection equipment, the best solution is a source capture collection system that captures mist right at the machine. Another option is to install ceiling units that provide ambient ventilation, but they are generally not as effective as source capture. These ambient approaches don't work so well with mist because, unlike fumes that rise, mist-laden air falls and causes slippery floors. Source capture requires less air, and is safer and more efficient.

The design challenges will be greater when retrofitting mist collection equipment for older machining centers built 20 or 25 years ago. Back then, mist collection was rarely considered. Newer machines utilize better ductwork designs and airflow patterns to pull air out of the machine at the recommended cfm airflow.

A good general rule is to maintain a slight negative pressure when doing machining. This will allow you to capture the fine mist without pulling chips, emulsion or oil into the collector.

It is also ideal to equip the mist collector with a variable frequency drive (VFD). During machining, the VFD speed should be reduced to a level just adequate to contain the mist in the machine because maximum airflow when doors are shut can pull mist and chips into the collector and shorten the filter life. In a newer machining center that is fairly airtight, you may be able to ramp down to 25 percent of full airflow while the doors are shut.

When it comes time to change parts and the doors are opened up, you can ramp up the fan to full airflow. However, we advise keeping airflow between 50 and 75 fpm through the door opening while changing parts to keep the mist inside the cabinet. The best designed systems leave most of the mist and all of the chips in the machining center.

If your shop is using compressed air to clean parts, make sure there is enough air to contain the mist in the cabinet in order to protect workers during part change-out.

It's always good to reduce the load on a collector as much as possible, since lots of metal chips can drastically shorten filter life. One option is to use a special hood or chip gate **(Figure 5)** to separate out metal chips and pre-clean the coolant/lubricant. Basically it acts like a horizontal cyclone designed for your required airflow. It spreads out the airflow to prevent a high-velocity suction area that picks up a lot of chips. Ductwork is generally about 6", and the area pulling the air is about six times that size. With that ratio, you will not pull excessive air into one place in the cabinet.

Metalworking fluids can run for a very long time, if pickup hoods and the mist collector's airflow are optimally designed. Chip gates can sometimes be retrofitted onto older equipment.

It is also important to equip ductwork with proper fittings and seals that are specifically made for oil. There is a misconception in the field that mist collectors and ductwork always leak, but unsuitable fittings and seals are often the cause.

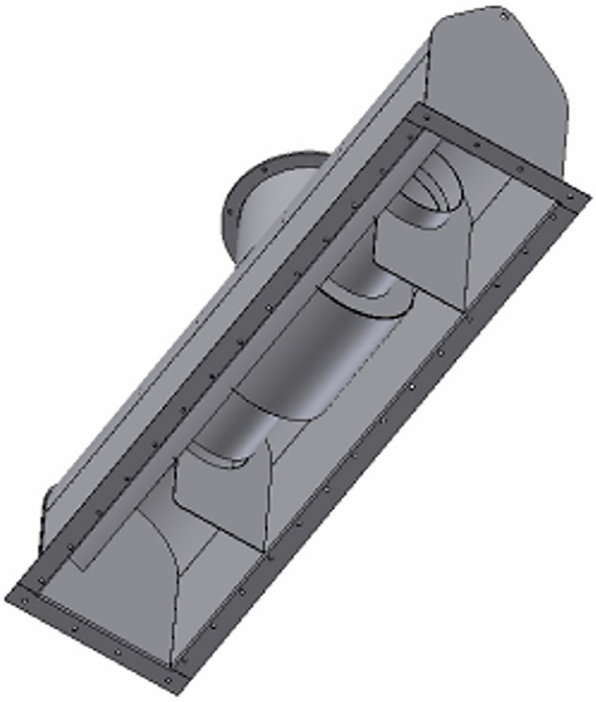

Figure 5 – Chip gate for pre-separation of metal chips

Also, make sure the cabinet is leak-proof and won't seep oil, causing a slipping hazard. Even very small cracks will allow oil to seep out. The best way to prevent these leaks and cracks is to use equipment that has been dye-tested and certified as leak-proof by the manufacturer.

In addition to providing a guarantee against leakage, a reputable manufacturer should guarantee filter emissions efficiency that is below required exposure limits. Some manufacturers will also provide written guarantees on filter life and run time to fit your operation.

Figure 6 – Clogged ductwork caused by inadequate filtration

There are special design considerations for applications utilizing minimum quantity lubrication (MQL)/near-dry machining. This type of machining replaces common coolant with a very small amount of high-quality lubricant that is precisely metered and applied to the interface of the cutting tool and workpiece. The amount of lubricant used, often a pure vegetable-based or ester oil, is defined as less than 40 milliliters per hour (ml/h) lubricant. MQL is becoming increasingly popular because of its environmental and sustainable benefits.

In MQL applications, the near-dry material generated in the process will cake up and plug ductwork if you don't design the ductwork correctly and have adequate filtration in place...generally a special pre-filter in the mist collector. **Figure 6** shows examples of ductwork conditions that can occur with improper designs.

General Work Practices and Controls for Reducing Exposure

You can tell when you walk into a machine shop whether they are observing good work practices. When they are not, you can literally smell, feel and taste the oil in the air. There are many factors involved in keeping machine shops as safe and clean as possible. Your approach to safety should be multifaceted to incorporate the following factors:

EQUIPMENT CONSIDERATIONS

- Make sure your machining centers and mist-producing processes use best practice mist collection. It is often preferable to use a collector designed specifically for either oil or water-soluble coolant mist removal, as opposed to a "general-purpose" collector. This is particularly important for centers with heavy-duty applications and long production runs.
- Require the supplier to provide a written guarantee on filter life, emissions performance and leak testing.
- Inspect equipment regularly to make sure it's working properly. Sometimes, emissions is fine at startup, but changes after a period of use.
- Conduct frequent air sampling to make sure you are well within the required personal exposure limits using monitors that show milligrams per cubic meter being emitted. If you suspect a problem or need independent verification of emissions levels within the facility, hire a company that specializes in air quality testing.

- Immediately clean up any oil you see on the floor, and find and address its source.
- Monitor trends in the differential pressure across the filters and make sure pressure is within the manufacturer's recommended operating range. If you notice high differential pressures, chances are you are not pulling the required airflow.
- Monitor air pressure daily or use a monitoring device to measure differential pressure and other critical functions and send alarms at critical set points. Some systems can provide web-based monitoring that can be accessed from your mobile device or your building maintenance system software.

EMPLOYEE CONSIDERATIONS

- Train and educate employees on the health risks associated with overexposure and how to prevent it using good housekeeping and work practices.
- Require workers to wash hands several times during the day if they are not wearing gloves.
- Require workers to change out of fluid-soaked clothes.
- Prohibit food, beverages and any other personal items in the workspace that may become contaminated.

# # #

John Dauber is senior regional manager, and Kevin Tucker is Mideast regional sales manager for Camfil Air Pollution Control (APC). Camfil APC is a global manufacturer of dust, mist and fume collection equipment and is part of Camfil, the largest air filter manufacturer in the world. For further information, contact 1-800-479-6801 or 1-870-933-8048; email filterman@camfil.com; website www.camfilapc.com.

References

American Conference of Governmental Industrial Hygienists (ACGIH), 1330 Kemper Meadow Drive, Cincinnati, Ohio 45240, www.acgih.org; Mineral Oil, Excluding Metal Working Fluids: TLV(R) Chemical Substances, 7th Edition Documentation (2010).

ASTM International, 100 Barr Harbor Drive, PO Box C700, West Conshohocken, PA, 19428; www.astm.org;

- ASTM International Metalworking Industry Standards: Environmental Quality and Safety, Fluid Performance and Condition Monitoring (2003)
- ASTM Standard E 1687-98, Determining Carcinogenic Potential of Virgin Base Oils in Metalworking Fluids (1998)
- ASTM Standard E 1302-00, Standard Guide for Acute Animal Toxicity Testing of Water-Miscible Metalworking Fluids (2000)
- ASTM Standard E 1497-00, Standard Practice for Safe Use of Water-Miscible Metalworking Fluids (2000)
- ASTM E2889 – 12, Standard Practice for Control of Respiratory Hazards in the Metal Removal Fluid Environment (2012)

National Institute for Occupational Safety and Health (NIOSH), 395 E Street, SW, Patriots Plaza 1, Suite 9200, Washington, DC 20201; www.cdc.gov/niosh/; Criteria for a Recommended Standard: Occupational Exposure to Metalworking Fluids (1998).

Occupational Safety & Health Administration (OSHA), 200 Constitution Avenue, Washington, DC 20210; www.osha.gov:

- OSHA Permissible Exposure Limits – Annotated Tables (2013)
- OSHA 29 CFR 1910, Subpart Z; Toxic and hazardous substances; 1910.1000, Air contaminants; Table Z-1, Limits for air contaminants
- Metalworking Fluids: Safety and Health Best Practices Manual (2001)

© Copyright 2019 Camfil APC